HEAD-MOUNTED TWO-WIRE TEMPERATURE TRANSMITTER

MODEL TW

RoHS

■ FEATURES

- Accuracy 0.1%F.S.(Pt-100),0.2%F.S.±0.5℃(CJC)(TC)
- Input type (Pt-100/J/K/T/E/R/S/B) can be modify)
- Output range(–1999~9999)/Display unit(℃,℉)can be modify
- Burnout protection function, upscale the outpu current limit of approximately≦21mA
- Field-rangeable supper voltage from 10 to 30V
- Output DC4~20mA,RL(max.)=(Vsupply~9V)/20mA,up to 750 ohms at 24VDC
- Low cost and high stability

1.MODEL:TW-□

NO	Input Range	NO	Input Range
P	Pt-100(-200~850℃)	K	K(-200~1360℃)
B	B(200~1800℃)	R	R(0~1760℃)
E	E(-185~990℃)	S	S(0~1760℃)
J	J(-200~760℃)	T	T(-200~395℃)

2.SPCIFICATION

- Measuring accuracy (23±5℃) : 0.1% F.S.(Pt-100) 0.2% F.S.±0.5℃ (CJC)(Thermocouple)
- Cold junction compensation accuracy :< ±0.5℃(0~70℃)
- Output current (supply voltage) : DC 4~20mA(DC 10 to 30V(<21mA))
- Sensor exciting current : <1mA(RTD)
- Analog output span-according display range : –1999~+9999 digit adjustable
- Analog output zero-according display range : –1999~+9999 digit adjustable
- Response time : <250ms (0~90%)
- Output load capability : RL(max.)=(V supply-9V)/20mA (up to 750 ohms at 24VDC)
- Output ripple(p-p) : <0.1% F.S.
- Offset range : 0~±99 digit adjustable
- Span range : 0~±199 digit adjustable
- Temp. coefficient : 50ppm/℃ (0~50℃)
- Burnout protection : Upscale the output current limit of approximately 21mA
- Reverse voltage protection : Included as standard
- Display : 7-segment LCD charactor high 5.5mm(0.216")
- Parameter setting : Touch switches
- Memory mode : Non-volatile E^2 PROM memory
- Dielectric strength : 2KVac/1 min. (input/case)
- RFI protection : 2W-150MHz at 2 meter causes less than 0.5% change in output
- Operating condition : -5~60℃(20 to 90% RH non-condensed)
- Storage condition : -10~70℃(20 to 90% RH non-condensed)
- Case materials : PBT(UL94-VO)
- Construction : Head-mounting(DIN type B head)
- CE EMC Certification : EN 55022:1998/A1:2000 Class A
  EN 61000-3-2:2000
  EN 61000-3-3:1995/A1:2001
  EN 55024:1998/A1:2001

3.TERMINAL CONNECTION

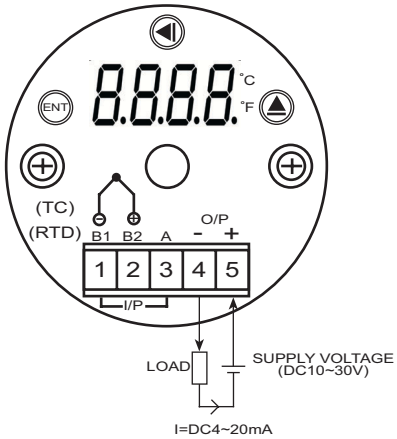
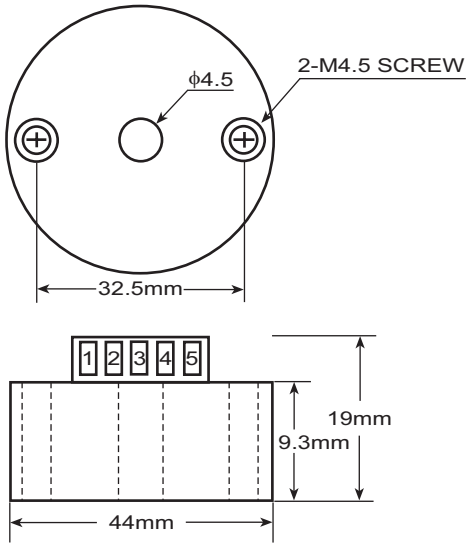
4.DIMENSION (unit:mm)